NO	PART NAME	PART#	REQ'D	MATERIAL
1	TUBE 2 1/2"X1 1/2"	A26787	1	SALCO PE
2	FLANGE 2"	HS2FLGS	1	SALCO PE
3	PIPE ELBOW BODY 3"X2"X90°	HS3X2X90PEB1	1	SALCO PE

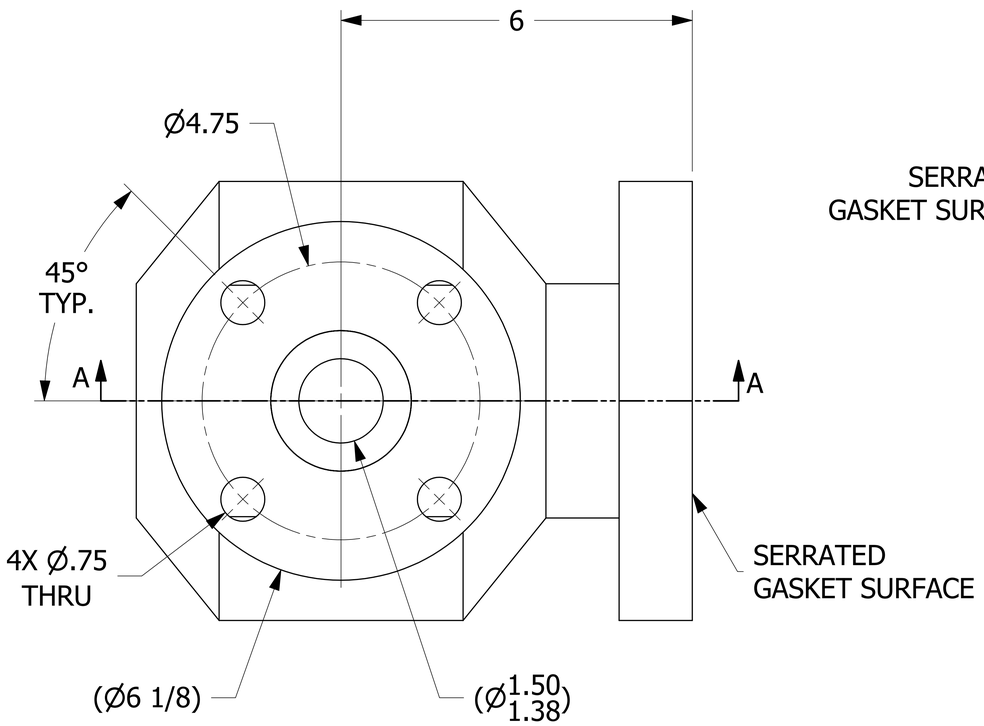

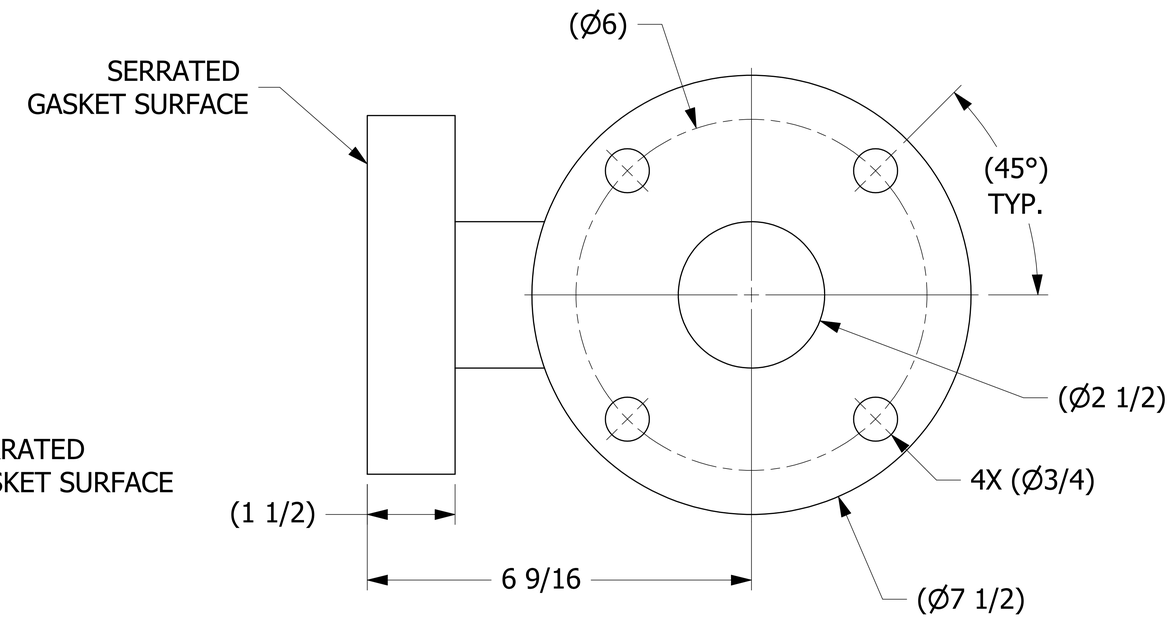

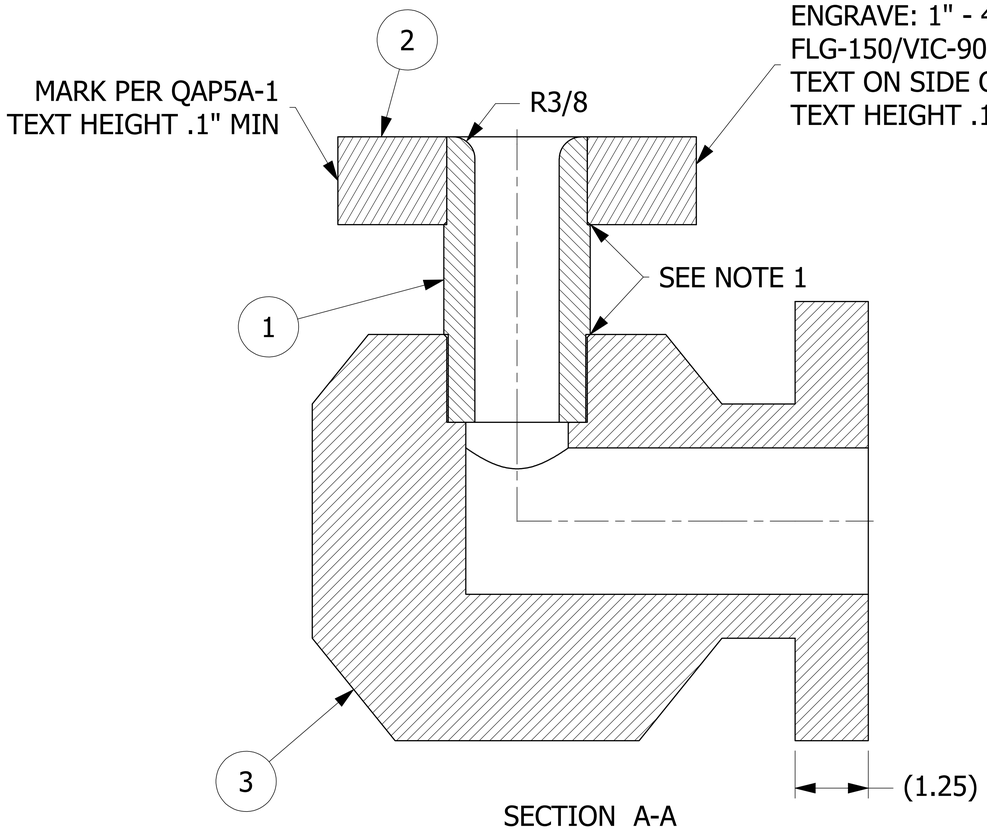

SECTION A-A

NOTES:
1. SEE DOCUMENT DSS 3 FOR FRICTION WELDING SPECIFICATIONS.
2. SEE DOCUMENT QAP5A-1 FOR MARKING PROCEDURE.
3. TEST PER QAP4C-1.

REV	BY	DATE	DESCRIPTION
A	TAK	9-21-17	RELEASED FOR PRODUCTION

UNLESS OTHERWISE SPECIFIED DIMENSIONAL TOLERANCES
FRACTIONAL: ±1/16
X.XX: ±.03
X.XXX: ±.015
ANGULAR: ±1°
DEBURR ALL SHARP EDGES. ALL MACHINED SURFACES TO HAVE A 125 RMS FINISH UNLESS NOTED OTHERWISE.
THIRD ANGLE PROJECTION

DRAWN BY:	TAK
CHECKED BY:	EJF
PROTOTYPE BY:	TAK
PROTOTYPE DATE:	9/21/2017
APPROVED FOR PRODUCTION BY:	TAK
PRODUCTION DATE:	9/21/2017

SALCO PRODUCTS, INC.

PART NAME: PIPE ELBOW 3"X2"X90°

MATERIAL: SEE BOM

PROJECT #: H170501 | SHEET #: 1 OF 1 | SCALE: 1:1

DRAWING #: E46072 | PART #: HS3X2X90PE9

THIS PRINT, PROPERTY OF SALCO PRODUCTS INC, CONTAINS PROPRIETARY INFORMATION AND MUST NOT BE COPIED, REPRODUCED, OR USED DETRIMENTALLY TO OUR INTEREST.