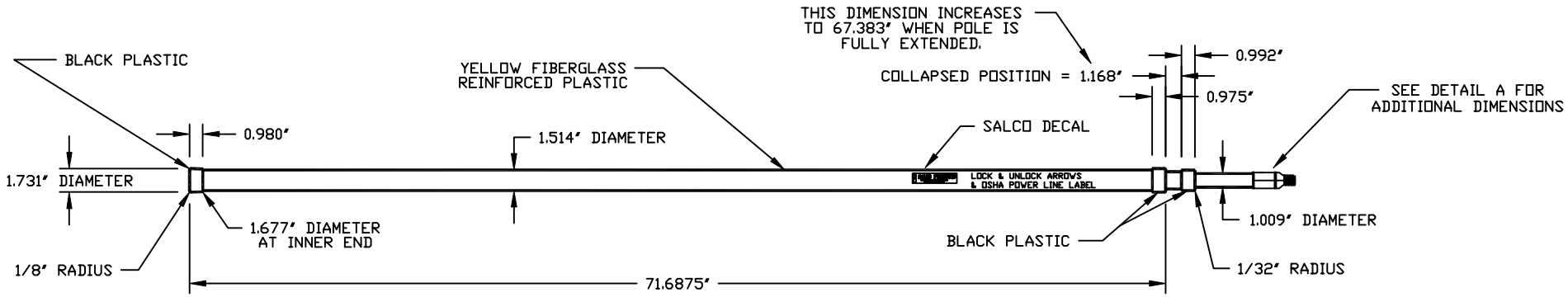

OVERALL VIEW

SCALE: 1/4" = 1"

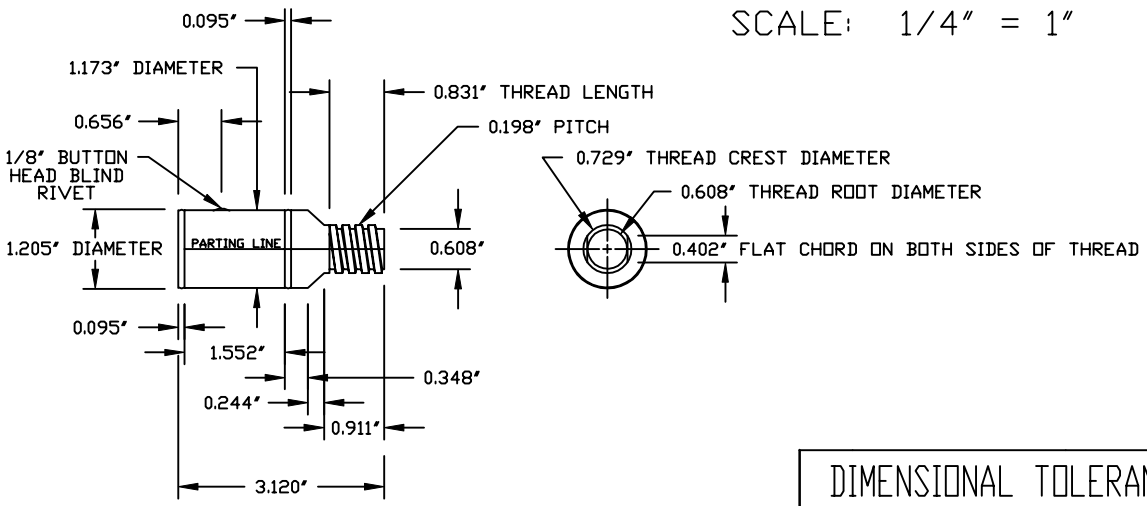

DETAIL B

CONNECTOR (TO PADDLE)
MATERIAL: CAST ALUMINUM & ZINC ALLOY
SCALE: FULL

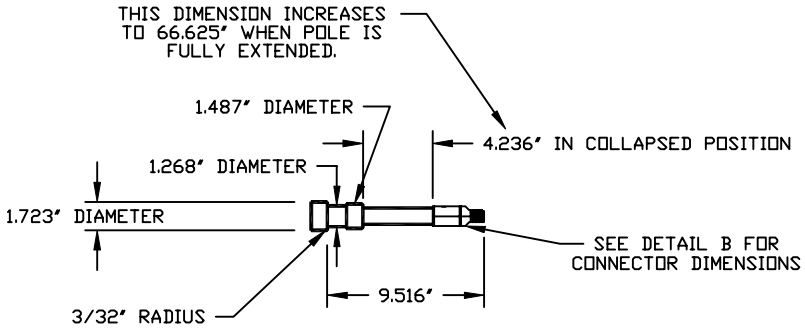

DETAIL A

SCALE: 1/4" = 1"

THIS PRINT, PROPERTY OF SALCO PRODUCTS INC., CONTAINS PROPRIETARY INFORMATION AND MUST NOT BE COPIED, REPRODUCED, OR USED DETRIMENTALLY TO OUR INTEREST.

DIMENSIONAL TOLERANCES UNLESS SPECIFIED

FRACTIONAL		+/- .015
TWO PLACE	.xx	+/- .010
THREE PLACE	.xxx	+/- .005
ANGLES		+/- 1°

REV:	BY:	DATE:	DESCRIPTION:

SCALE: AS NOTED
SHEET: D
MATERIAL: AS NOTED
SHRINK: (IF APP.)
DIR/REF: MISC\P618
PART NO: P618

SALCO PRODUCTS INC.

TITLE: 6 FT. TO 18 FT. LONG TELESCOPING POLE FOR KLEAN-OUT PADDLE

DRAWN BY: TJN
DATE: 11/25/92
CHECKED BY:
DWG. NO. D5293